Power Door Locks

Component Location Index
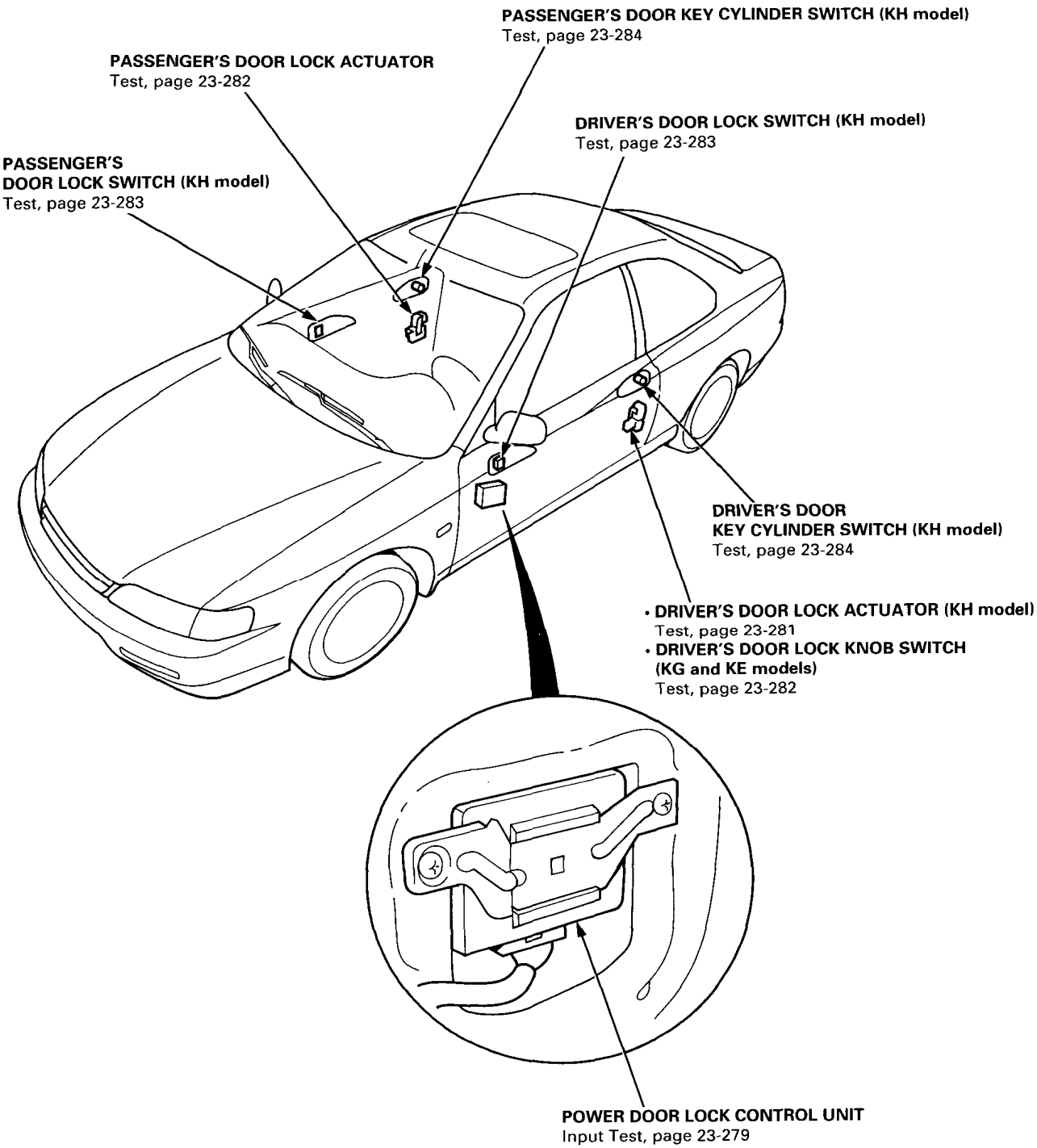
NOTE: LHD type is shown, RHD type is symmetrical.